Dimensions - VWC

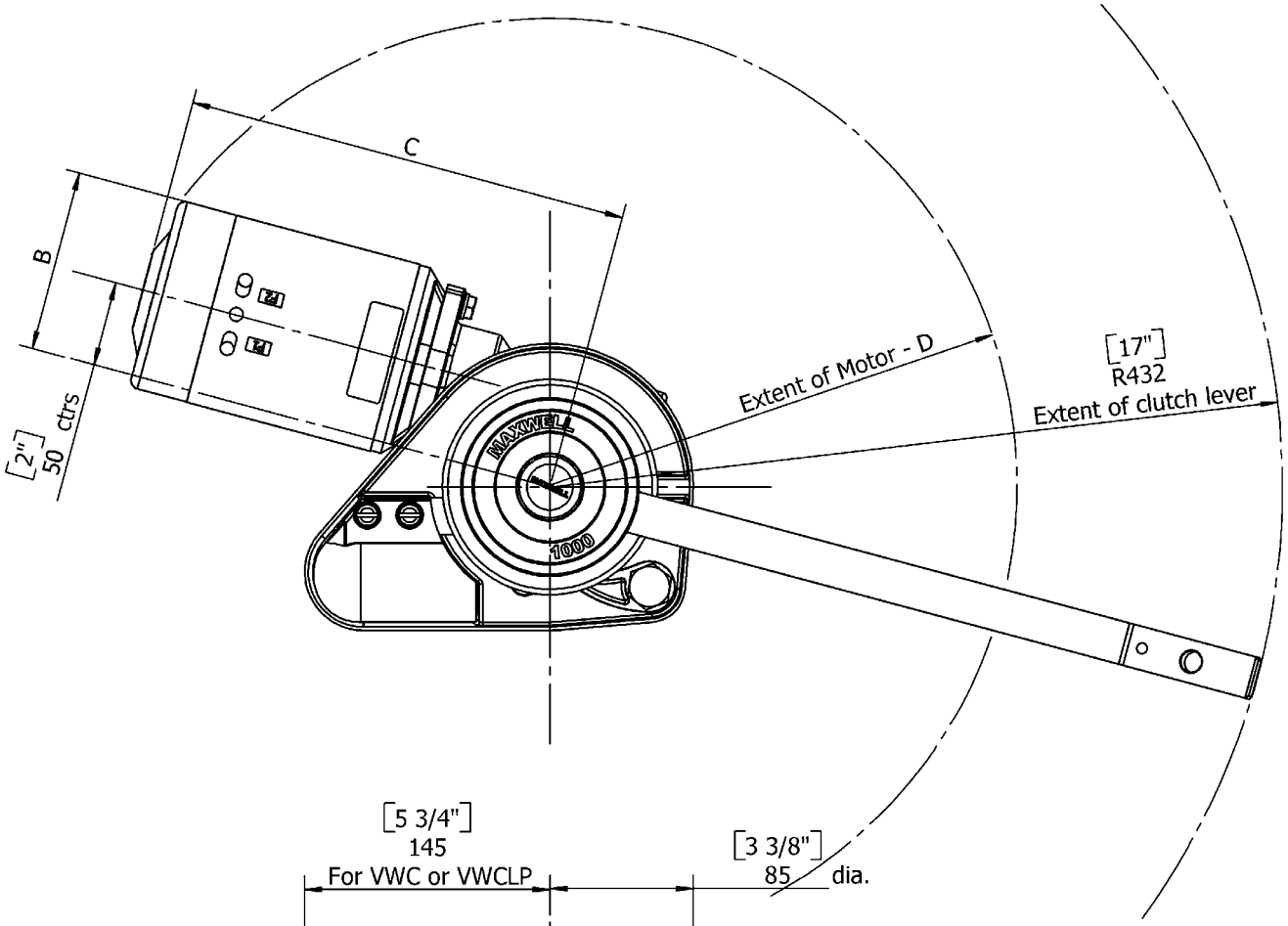

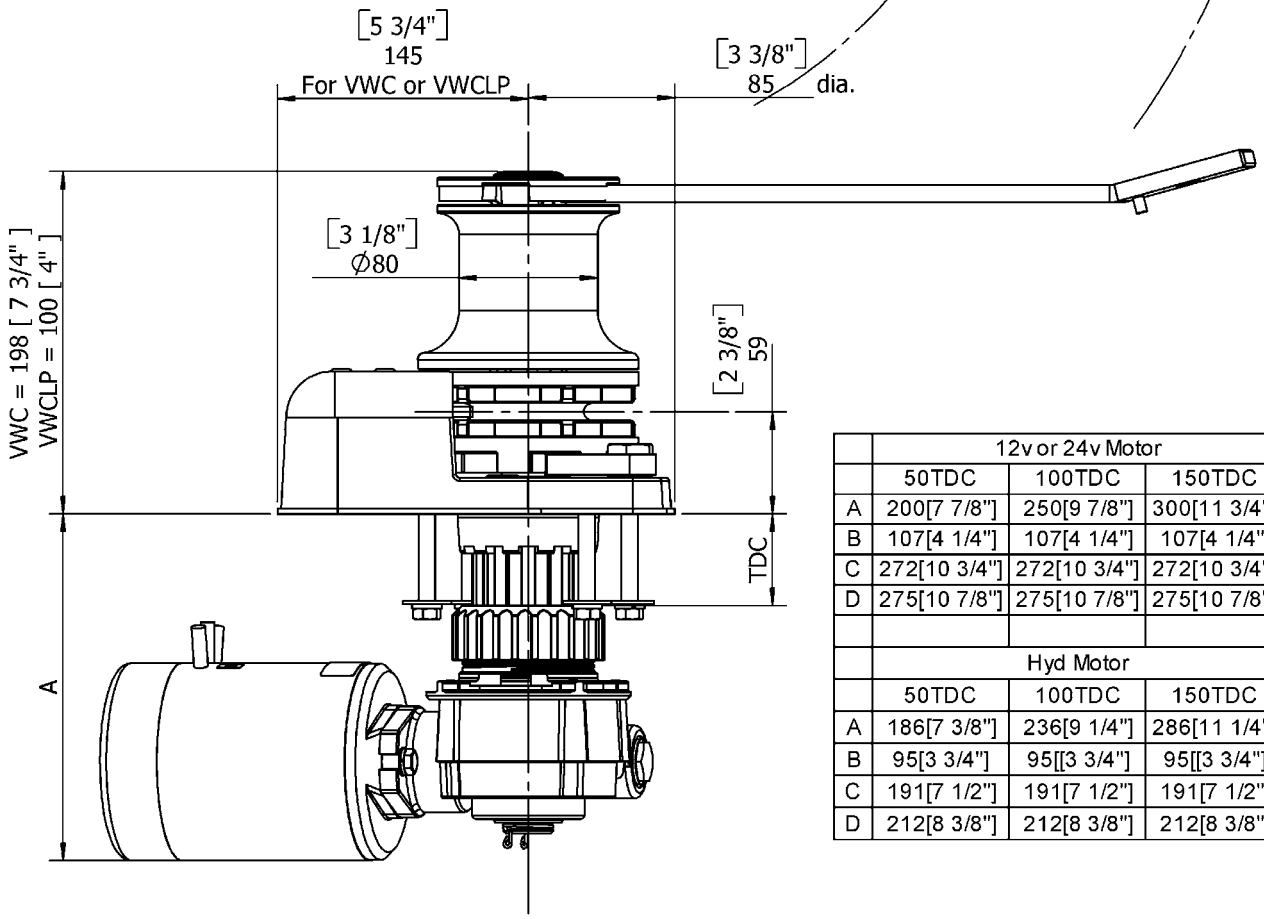

	12v or 24v Motor		
	50TDC	100TDC	150TDC
A	200[7 7/8"]	250[9 7/8"]	300[11 3/4"]
B	107[4 1/4"]	107[4 1/4"]	107[4 1/4"]
C	272[10 3/4"]	272[10 3/4"]	272[10 3/4"]
D	275[10 7/8"]	275[10 7/8"]	275[10 7/8"]
	Hyd Motor		
	50TDC	100TDC	150TDC
A	186[7 3/8"]	236[9 1/4"]	286[11 1/4"]
B	95[3 3/4"]	95[[3 3/4"]	95[[3 3/4"]
C	191[7 1/2"]	191[7 1/2"]	191[7 1/2"]
D	212[8 3/8"]	212[8 3/8"]	212[8 3/8"]