SR CONTROL (CH5400P)

APPLICATIONS

- Ideal for most single and multiple station boats.

FEATURES

- Polished stainless steel cover and levers
- Rugged cast hanger plate
- Removable cover enables easy access to the control mechanism
- Adjustable friction and stops
- Optional neutral safety switch to prevent starting in gear
- Optional shift detent kit (if used in dual stations; use on main station only)
- Uses 33 and 43 type cables
- Mechanical advantage: shift 3.10:1/throttle 3.10:1
- Meets/exceeds all applicable industry standards

SR Twin is rugged and made with the finest marine grade materials. Removable cover enables easy access to the mechanism. Includes adjustable brakes and stops. Accepts 3300/33c or 4300 series control cables. Optional detent kits and neutral switch available.
Additional hardware is required for twin station use.

ORDER INFORMATION

CONTROLS	PART No.
Twin SR 2-lever control Old Part No. 036969-001	CH5400P
ACCESORIES AND PARTS	**PART No.**
Clutch detent kit	036774
In-series dual station kit, 30 series (2 required for twin lever control)	039490-002
In-series dual station kit, 40 series (2 required for twin)	048501-002
Neutral safety switch	041117
Mounting hardware kit, twin	060991

Issue Date - Oct 2013
Issue Number - mcsa6

SR CONTROL (CH5400P)

TECHNICAL DATA

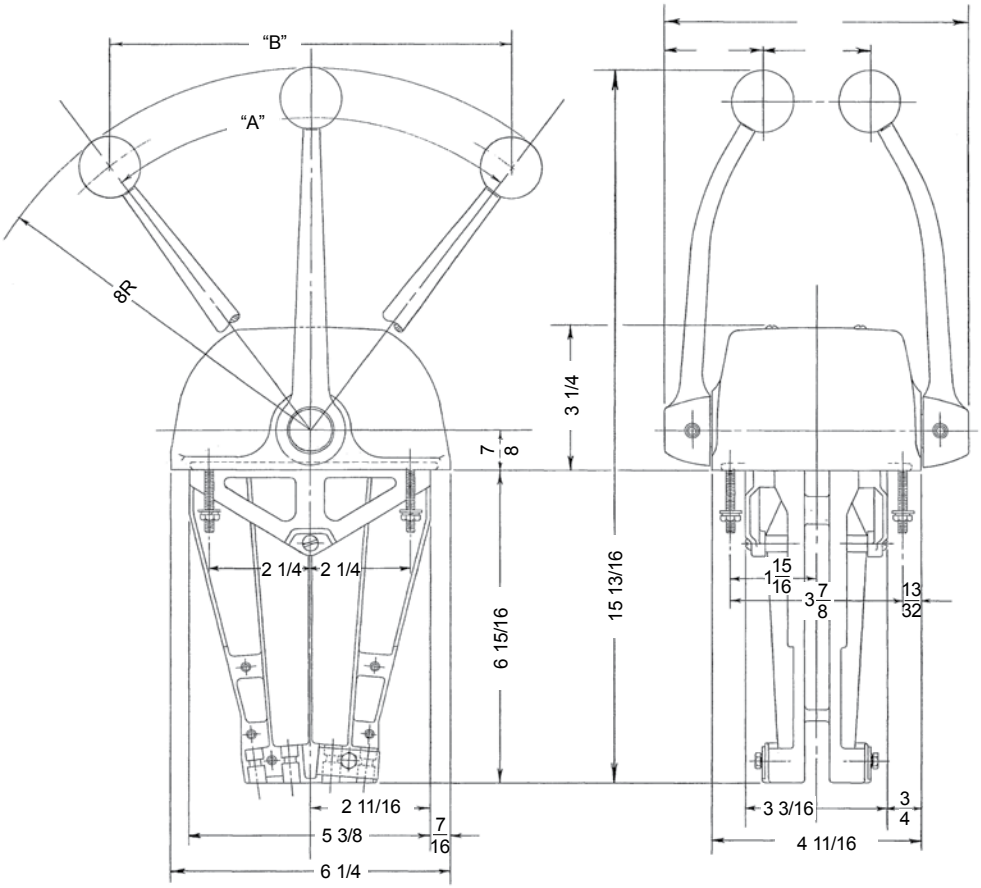

Issue Date - Oct 2013
Issue Number - mcsa6