XTREME SERIES - SIDE MOUNT CONTROL

FEATURES

- All controls include start in gear protection
- Designed for use with both 3300/33C and OEM shift and throttle cables
- Suitable for most single engine boats
- Dual action lever (throttle and shift control on one handle)
- Neutral Interlock standard on all side mount controls
- Trim & Tilt options available
- All controls include cut off switch (inboard and outboard versions)
- Drag adjustment on all models
- Easy installation and set up
- Neutral “warm up” button for throttle only operation
- Designed and assembled in the USA

CHX8051P Pictured

The ergonomics and features of our CHX8051P controls are advanced beyond those of any other control on the market. A shapely, balanced handle design provides an incredibly smooth yet positive feel, neutral interlock, neutral throttle warm-up, and start-in-gear protection features are standard on all CHX85/0XXP models, with power trim/tilt, emergency cut off switches offered as an option. In addition the cosmetics of these controls can be configured to suit many tastes. For a starboard gunwale mount control.

CHX85/0XXP controls are suitable for use with both 3300/33C or OEM type control cables without adaptation.

ORDER INFORMATION

OPTION - BLACK	PART No.
Xtreme Side Mount Control, Black with Engine Cut Off Switch	CHX8550P
Xtreme Side Mount Control, Black with Engine Cut Off Switch, Trim Switch	CHX8551P
Xtreme Side Mount Control, Black with Engine Cut Off Switch, Trim Switch, Tilt Switch	CHX8552P
Xtreme Side Mount Control, Black (no Cut Off Switch)	CHX8553P
Xtreme Side Mount Control, Black with Trim Switch (no Cut Off Switch)	CHX8554P
Xtreme Side Mount Control, Black with Trim Switch, Tilt Switch (no Cut Off Switch)	CHX8555P
OPTION - CHROME	**PART No.**
Xtreme Side Mount Control, Chrome with Engine Cut Off Switch	CHX8050P
Xtreme Side Mount Control, Chrome with Engine Cut Off Switch, Trim Switch	CHX8051P
Xtreme Side Mount Control, Chrome with Engine Cut Off Switch, Trim Switch, Tilt Switch	CHX8052P

Issue Date - Oct 2016
Issue Number - mcda1

XTREME SERIES - SIDE MOUNT CONTROL

TECHNICAL DATA

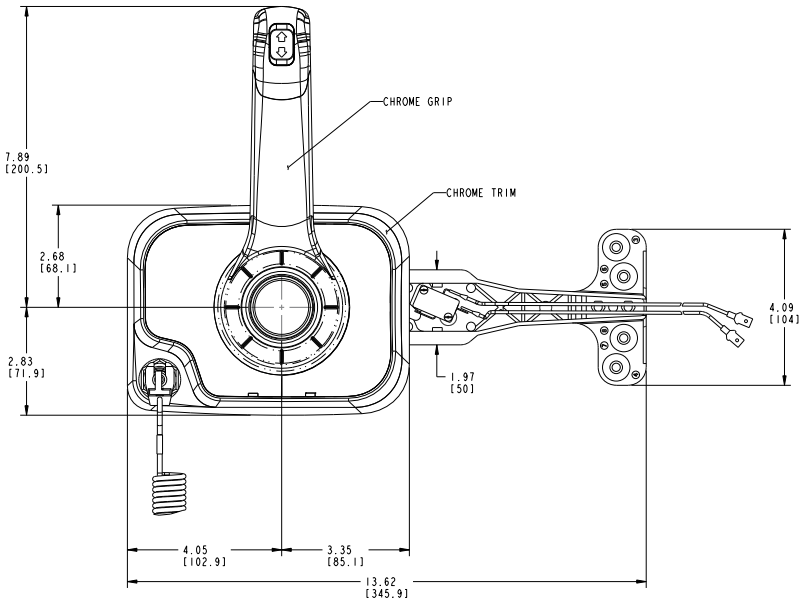

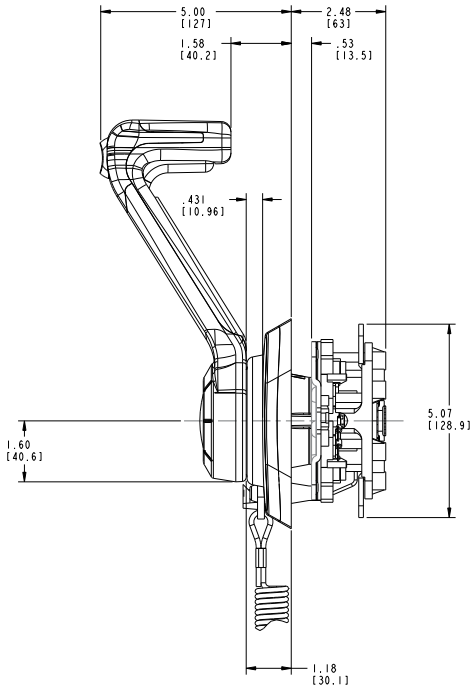

CHX8051P Hole Cutout

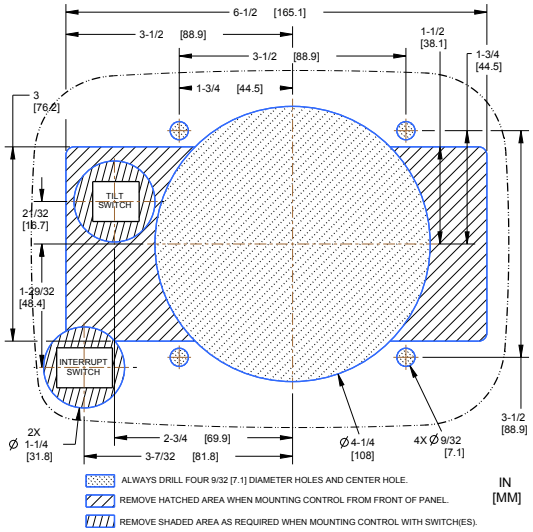

Issue Date - Oct 2016
Issue Number - mcda1