MT-3 TOP MOUNT CONTROL

FEATURES

- Dual action (throttle and shift in one lever).
- Sturdy control provides one-handed positive engine control.
- Neutral warm-up is done by pulling out the hand levers in the neutral position.
- Built-in friction drag helps reduce slippage and throttle creep while underway.
- Includes hardware for 3300/33C control cables.
- Single Lever may use 4300 series control cable with hardware kit 308742.

NOTES

** Single control accepts 43C type cable with optional connection kit.*
Standard control suits 33C type cables.

World's most popular classic design, dual action, top mount controls. Chrome finish, available in single or twin engine versions.

Suits 33C type control cables.*

ORDER INFORMATION

DESCRIPTION	PART No.
MT3 Single	CH5310P
MT3 Single (with pull cable action for both shift & throttle)	CH5330P
MT3 Twin	CH5300P
MT3 Twin (with pull cable action for both shift & throttle)	CH5320P

TECHNICAL DATA

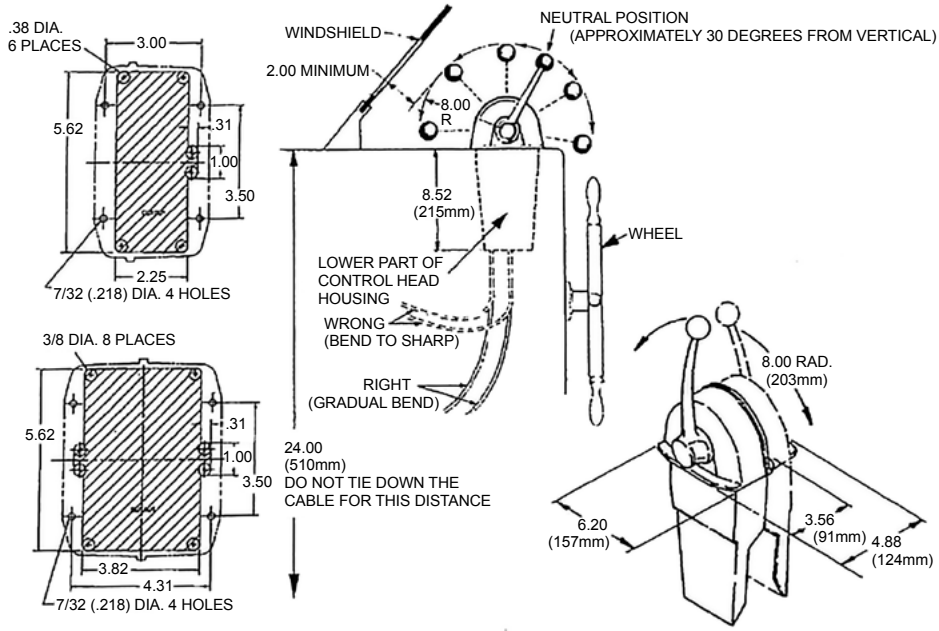

Issue Date - Dec 2013
Issue Number - mcda8

SEASTAR SOLUTIONS®

Learn More

www.seastarsolutions.com

GENUINE SEASTAR SOLUTIONS
A WORLD LEADER IN MARINE PRODUCTS